Barra MEC 18-20-21 - Misure per il trasporto
MEC boom 18-20-21 - Transport mode dimension

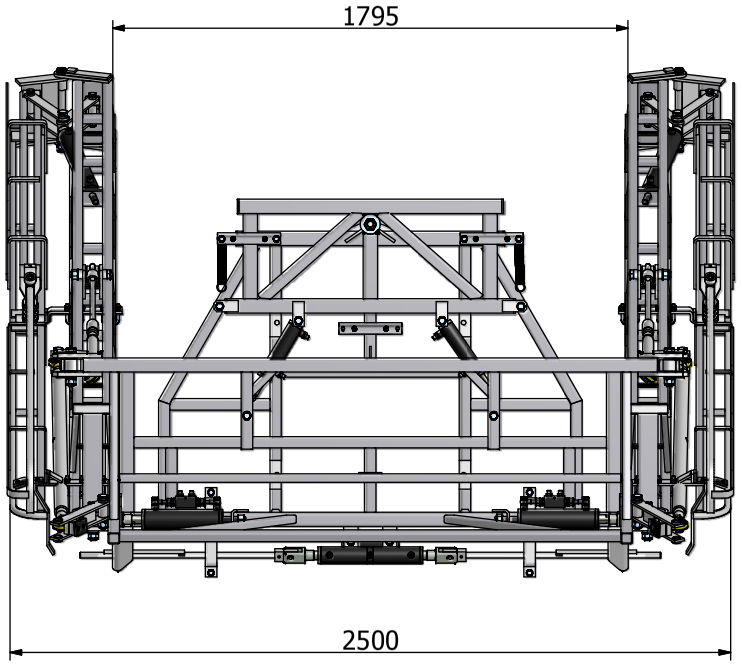

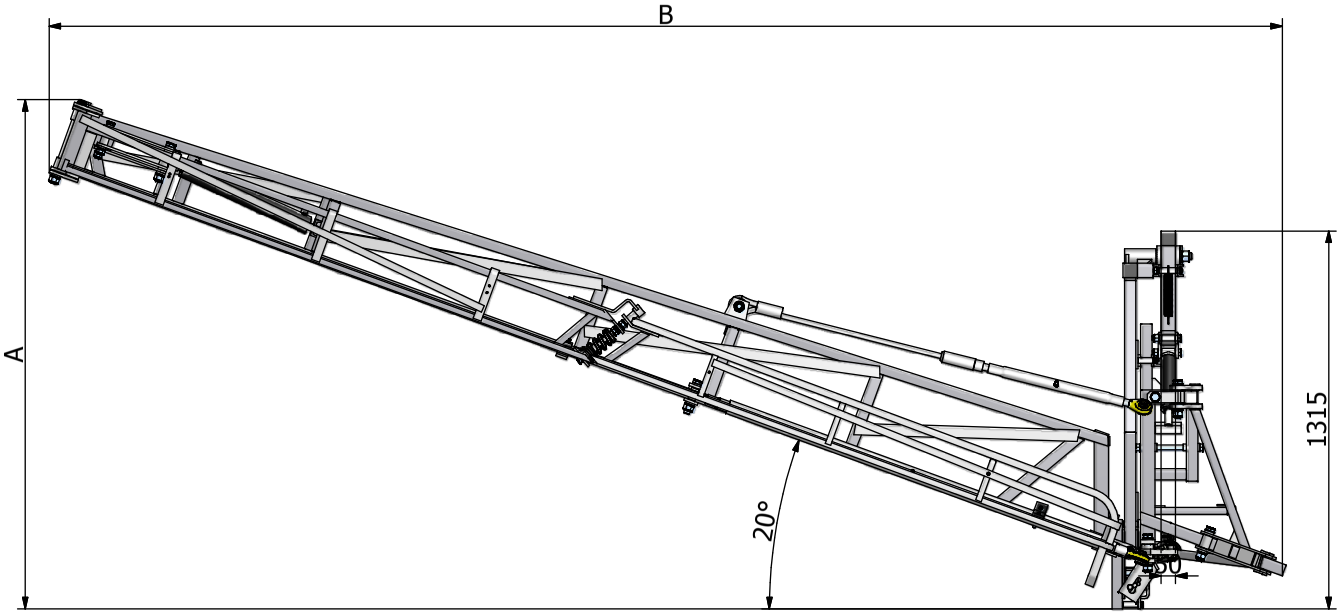

Dimension		
Version	A	B
18 mt.	1780	4300
20 mt.	1990	4800
21 mt.	2160	5280

Boom weight	
Version	weight
18 mt.	450
20 mt.	500
21 mt.	515

Misure di attacco
Connection dimension

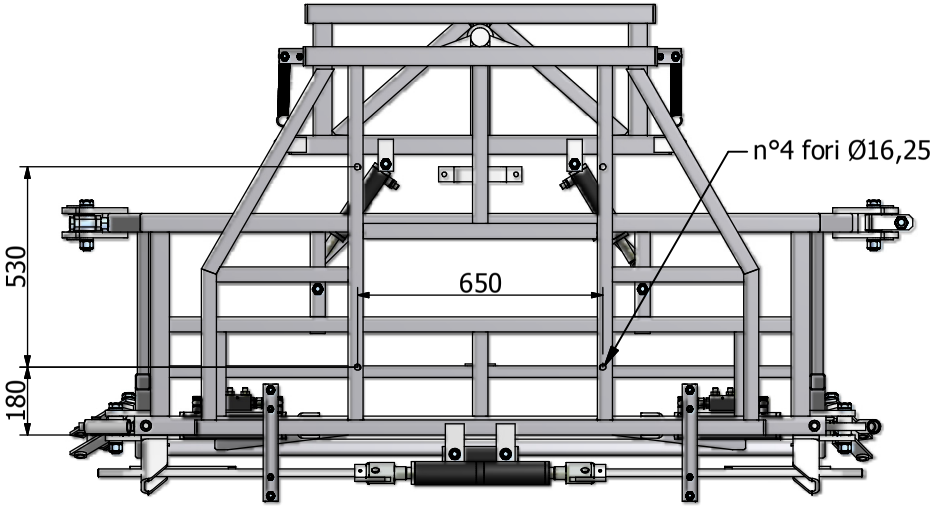

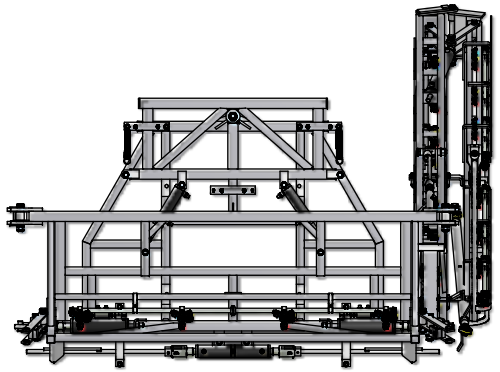
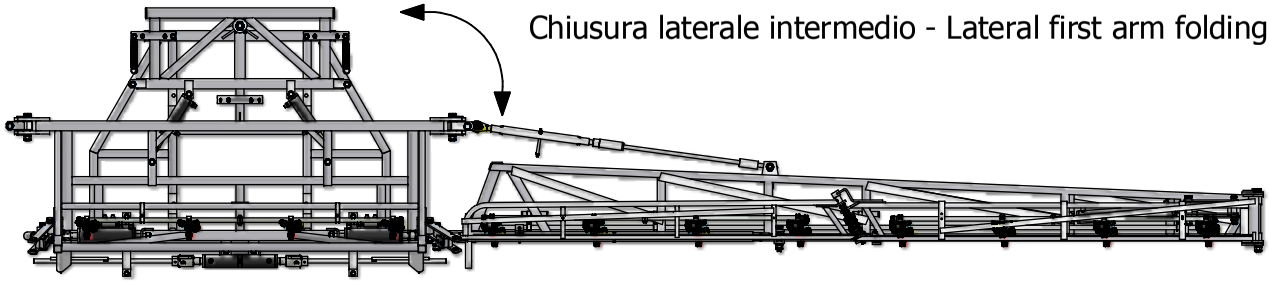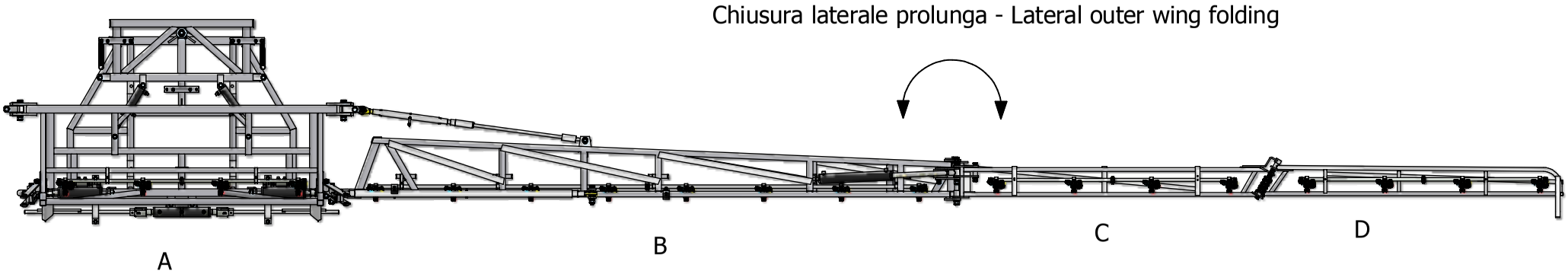
Boom nozzles				
Version	A	B	C	D
16 mt.	4	6	4	4
18 mt.	4	8	4	4
20 mt.	4	9	5	4
21 mt.	4	10	5	4